Simple Operation
Outstanding Image Quality

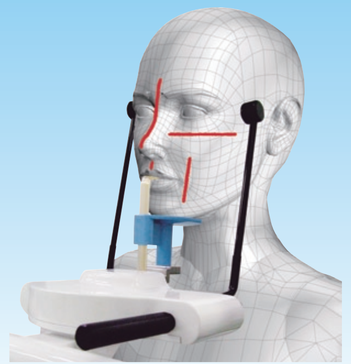

●Simple accurate positioning
Three bright red laser positioning beams allow you to accurately line up the patient.

●Simple positioning with motorized focus laser beams and one touch glide overhead.

●Intuitive interactive user interface.
Auto selects exposure settings with just a mouse click.

SPECIFICATIONS

Model	Bel-Cypher N
Power Voltage	AC 110/120/220/230/240V 50/60Hz
Power Capacity	1.5kW
H.T. Generator	High frequency Inverter (100kHz)
X-ray Tube Voltage	60kV - 80kV (1kV step)
X-ray Tube Current	2 to 8mA (1mA step)
X-ray Tube	D-052SB (Toshiba)
X-ray Tube Focus	0.5 X 0.5mm
Total Filtration	2.5mmAl (minimum)
Sensor Specifications	Color depth : 14 bit Static resolutions: 4.5 line pairs per mm
Exposure Mode	Panoramic (Adult and Child) Panoramic Bitewing（Adult and Child） TMJ Lateral 4 sections
Exposure time	Panoramic: 10 sec Panoramic Bitewing: 4.6sec (both sides) TMJ 4 sections: 2.5 sec (X4)
Magnification	Panoramic: 1.2 to 1.3 Panoramic Bitewing: 1.2 to 1.3 TMJ lateral 4 sections: 1.2
Patient Positioning Beam	3 Laser beams (Focus, Median, Frankfort)
Positioning tools	Panoramic: Bite Piece and Head Holding Rod TMJ: Ear Rod
Weight	165.0kg w/o optional free standing base

TWAIN compatible
Interface : Ethernet 1000 Base-T
Optional free standing base
＊Requires PC for operation

DIMENSIONS

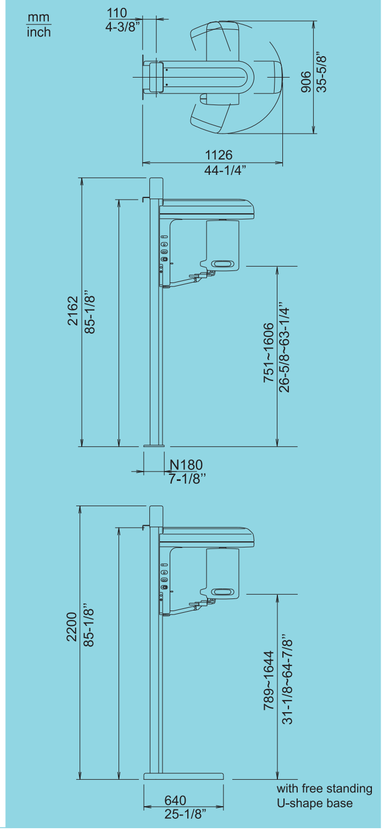

Computer Requirements

CPU
Intel Core2 Duo 3.00 GHZ minimum
Intel Xeon W350 2.66 GHz or better recommended

Video
NVidia Quadro FX380 256MB or better

Memory
4 GB ram or better

Operating System
Windows XP Professional 32 bit
Windows 7 Professional 32 bit
Windows 7 Professional 64 bit

Ports
Network adapter 1 GB
Network adapter 10/100 for network

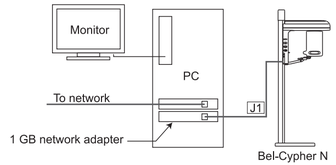

The manufacturer reserves the right to alter the specifications without notice

Distributed by : Takara Belmont Corporation
2-1-1, Higashishinsaibashi, Chuo-ku, Osaka 542-0083 Japan
Tel. +81 6 6213 5945 http://www.takarabelmont.co.jp

Bel-Cypher N

Simply Outstanding

Digital Panoramic X-ray unit

Bel-Cypher N

Panoramic image (adult)

Panoramic image (child)

Panoramic Bitewing
(adult) **(child)**

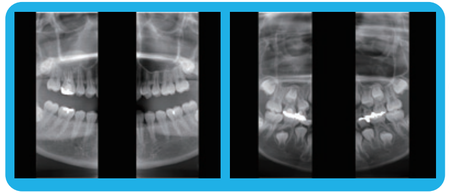

Images typical of what you will produce in your practice.

Bel-Cypher N images do not need to be digitally enhanced to get a sharp image.

The special “Panoramic Bitewing” view allows for interproximal caries detection.
Provides an excellent solution for patients that limit placement of intra-oral film or sensor.

TMJ 4section (side view)

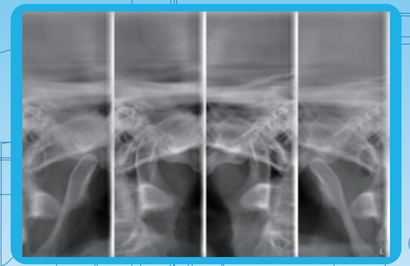

Sharpening, gamma, contrast and brightness are all adjustable right in the Bel-Cypher N’s TWAIN software.

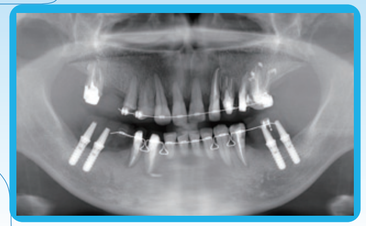

High resolution.
The secret to the Bel-Cypher N’s easily attainable yet excellent images lies in the exclusive high resolution sensor package and TWAIN driver software.

So Simple,
Bel-Cypher N’s high resolution sensors and software produces crisp clear sharp image even with less than ideal patient positioning.

Make your life simple with Bel-Cypher N

Bel-Cypher N

Shown with optional free standing base

EXPOSURE MODE	Panoramic	Adult
		Child
	Panoramic Bitewing	Adult
		Child
	TMJ	Lateral 4 Sections

EXPOSURE TIME	Panoramic	10.0sec
	Panoramic Bitewing	4.6sec (both sides)
	TMJ	2.5sec(X4)

Belmont

*Sample images are cropped for use in this document,actual pan images will include the full mandible.